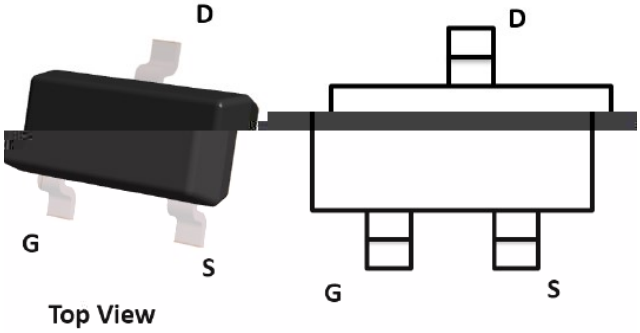
D
D
G
S
G
S
Top View

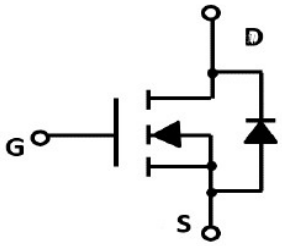
D
G
S

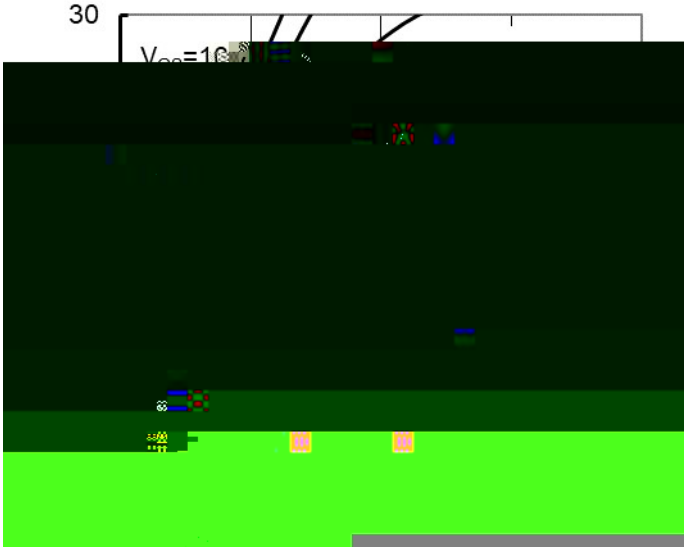
30

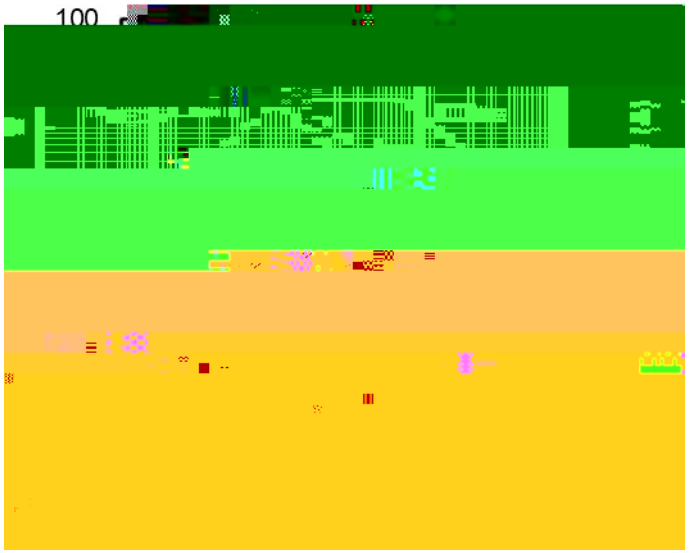
100

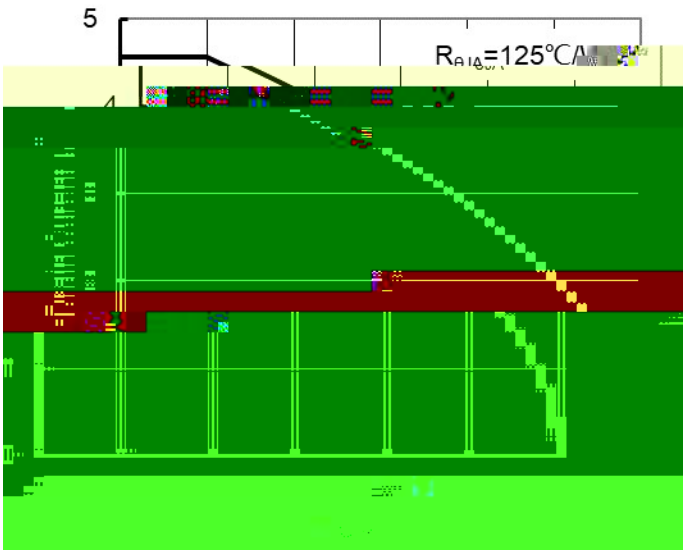
5
RθJA=125℃/W

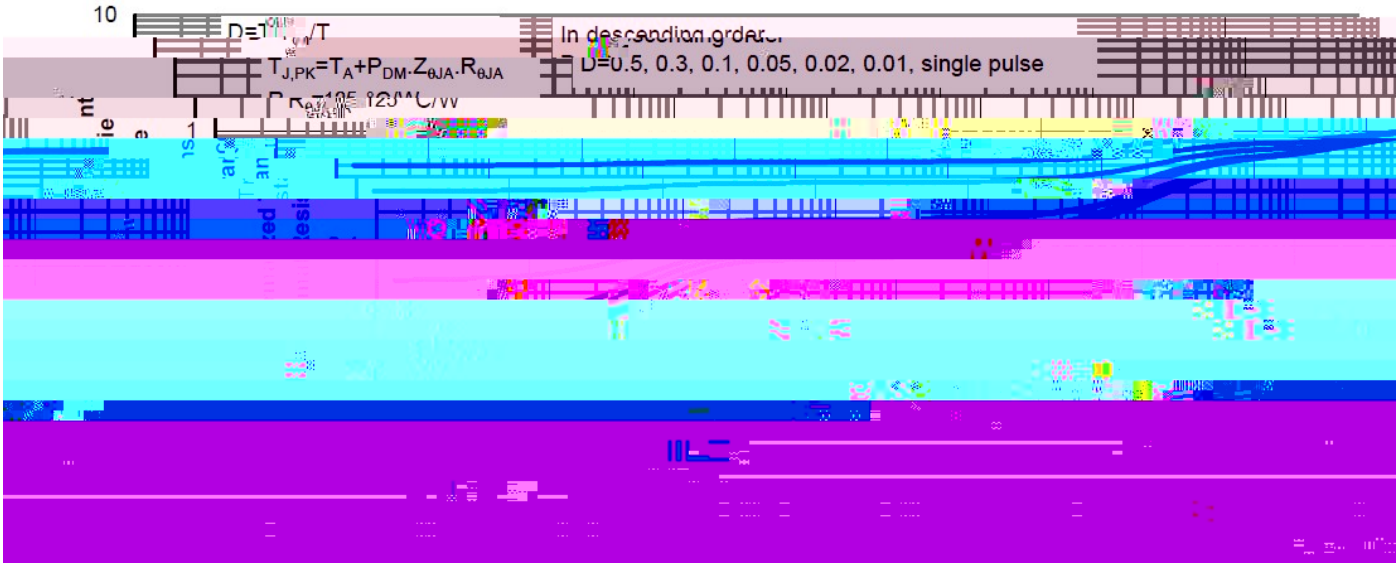
10
D=TON/T
TJ,PK=TA+PDM·ZθJA·RθJA
In descending order:
D=0.5, 0.3, 0.1, 0.05, 0.02, 0.01, single pulse
1

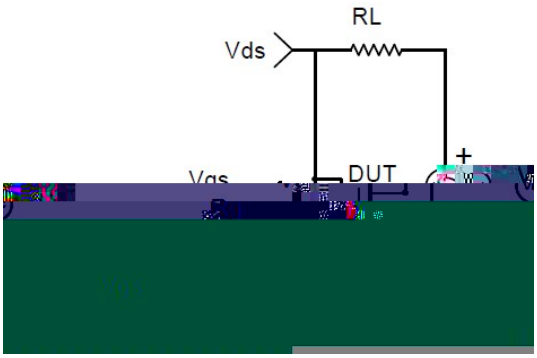
RL
Vds
DUT
+

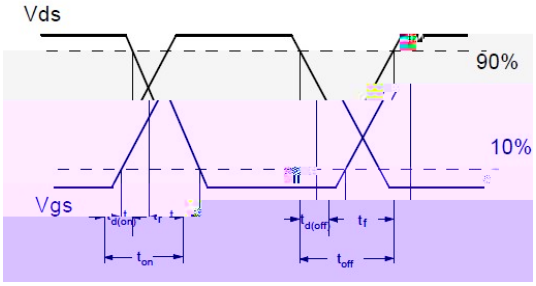
Vds
90%
10%
Vgs
td(on)
tr
td(off)
tf
ton
toff

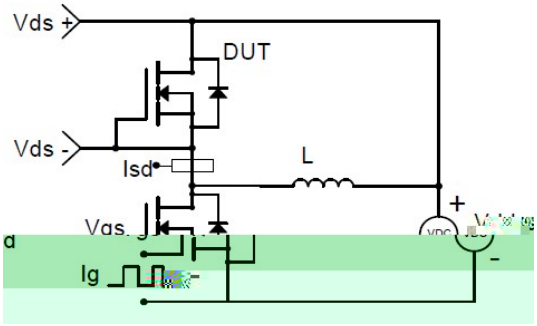
Vds +
DUT
Vds -
Isd
L
Vgs
Ig
+
-

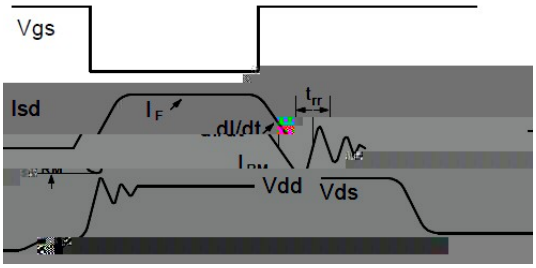
Vgs
Isd
IF
trr
dI/dt
Vdd
Vds

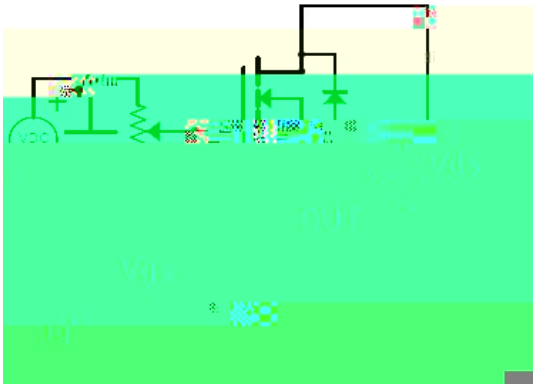

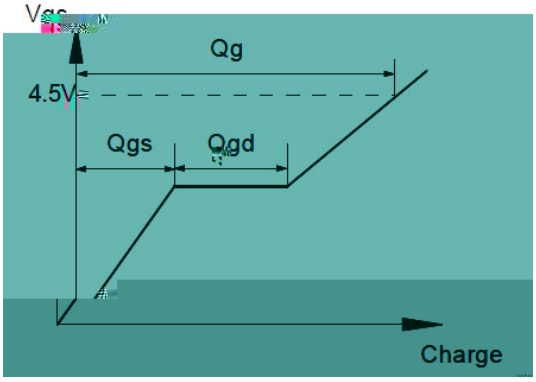
Qg
4.5V
Qgs
Qgd
Charge

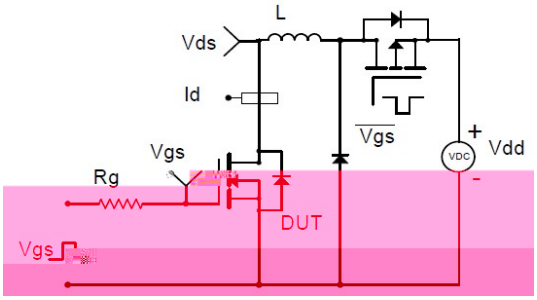
L
Vds
Id
Vgs
Rg
DUT
Vgs
+
Vdd
-

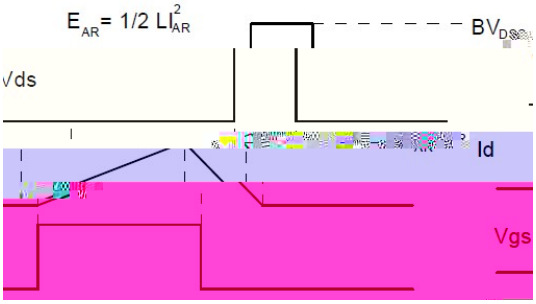
EAR= 1/2 LIAR2
BVDSS
Vds
Id
Vgs

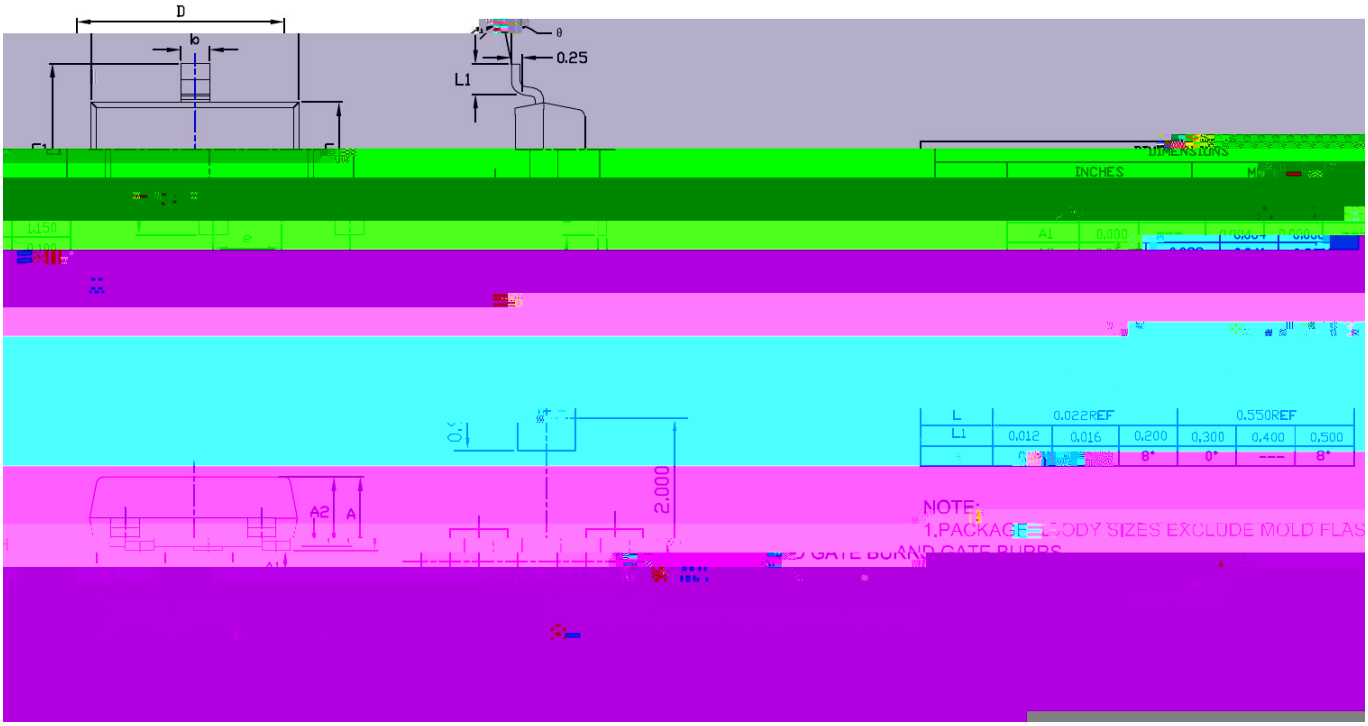
D
b
θ
0.25
L1
DIMENSIONS
INCHES
A1
0.000
L
0.022REF
0.550REF
L1
0.012
0.016
0.200
0.300
0.400
0.500
8°
0°

8°
0.1
2.000
A2
A
NOTE:
1.PACKAGE BODY SIZES EXCLUDE MOLD FLAS
AND GATE BURRS