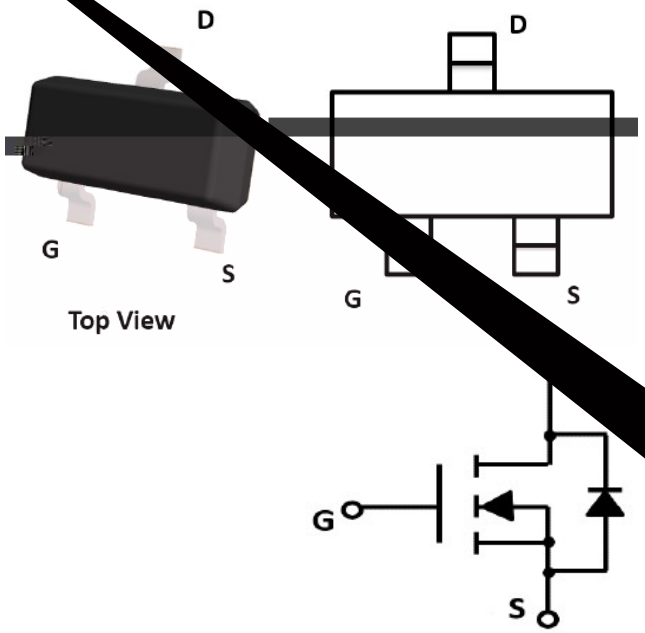
D
D
G
S
G
S
Top View
G
S

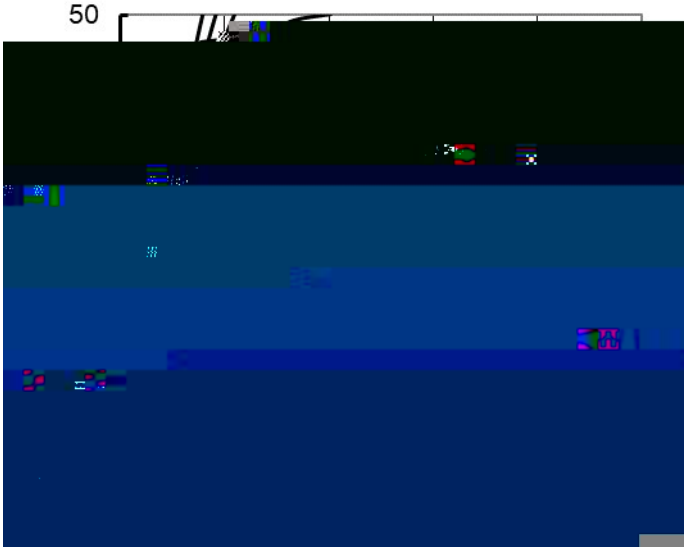
50

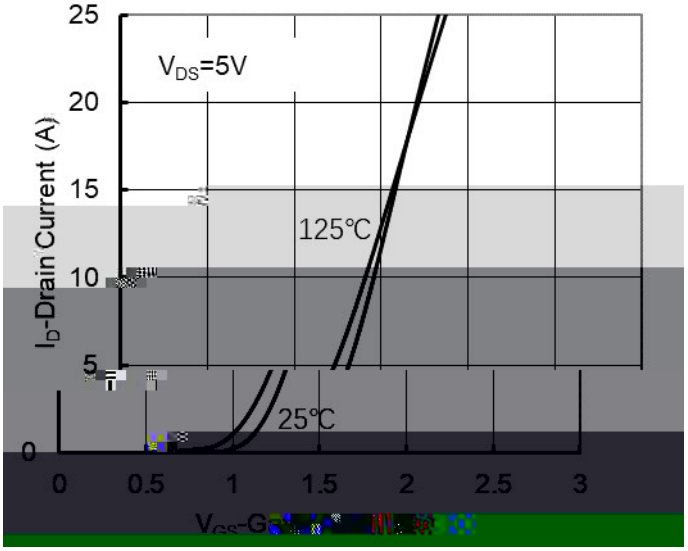
25
20
15
10
5
0
V_{DS}=5V
125℃
25℃
I_D-Drain Current (A)
0
0.5
1
1.5
2
2.5
3

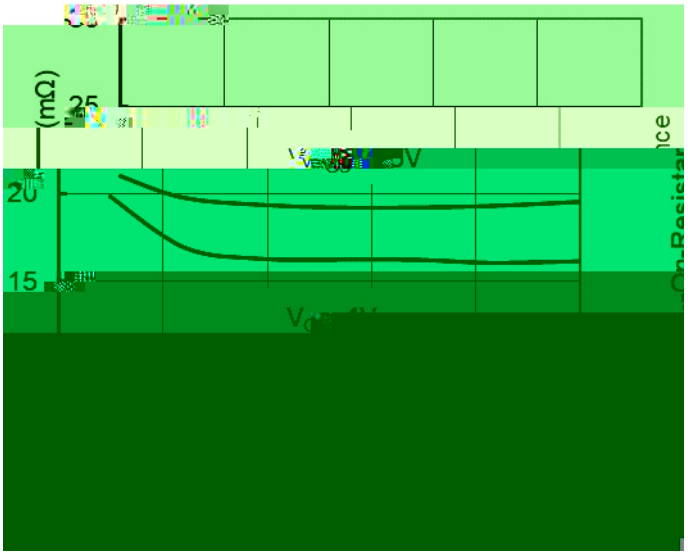
(mΩ)
25
20
15

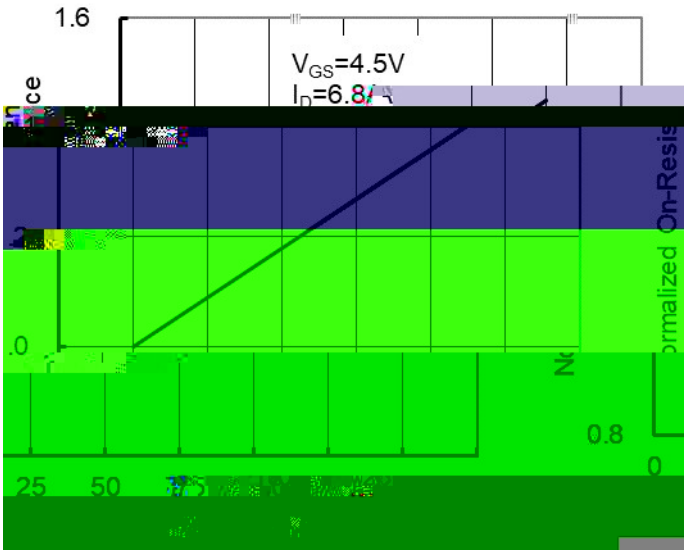
1.6
V_{GS}=4.5V
0.8
0
25
50

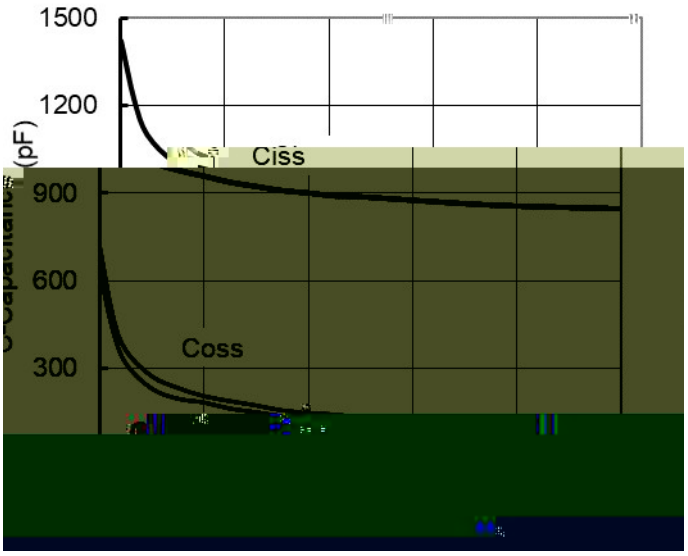
1500
1200
900
600
300
(pF)
Ciss
Coss

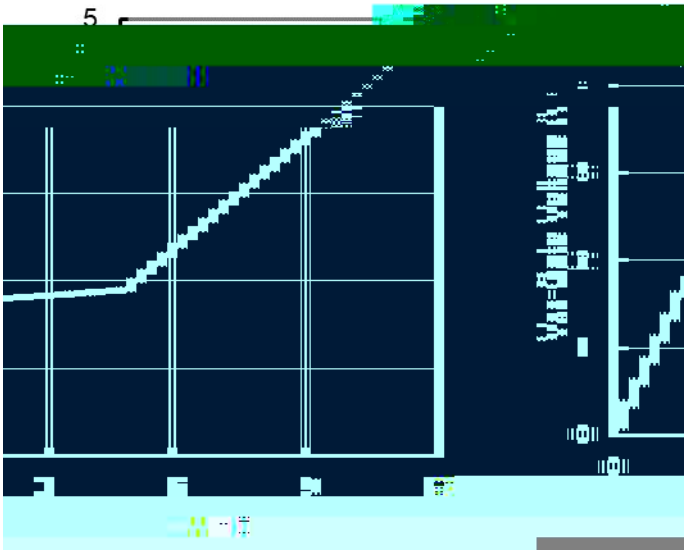
5

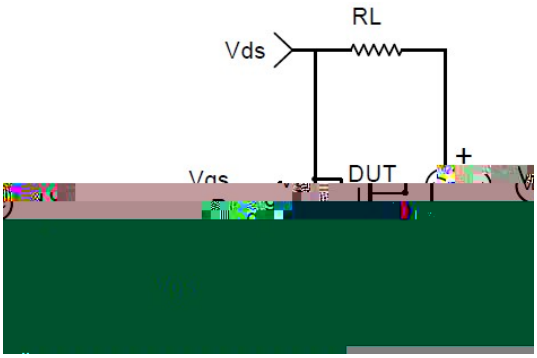
RL
Vds
DUT
+

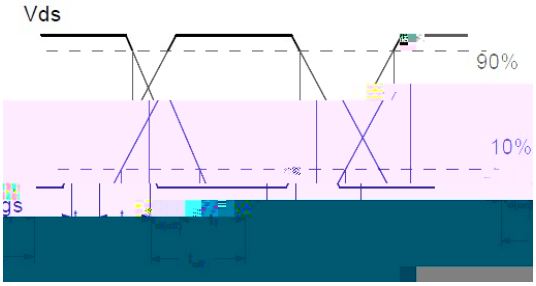
Vds
90%
10%

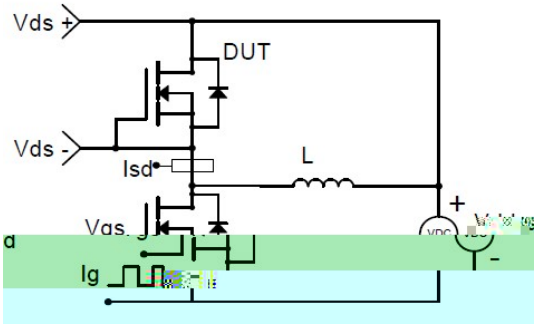
Vds +
DUT
Vds -
Isd
L
+
Vgs
Ig
-

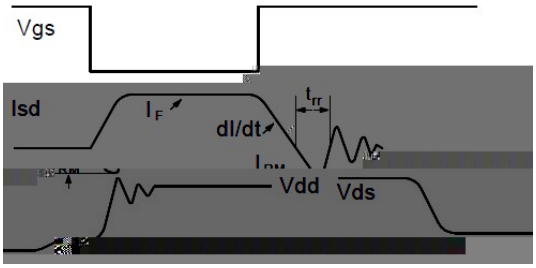
Vgs
Isd
dI/dt
Vdd
Vds

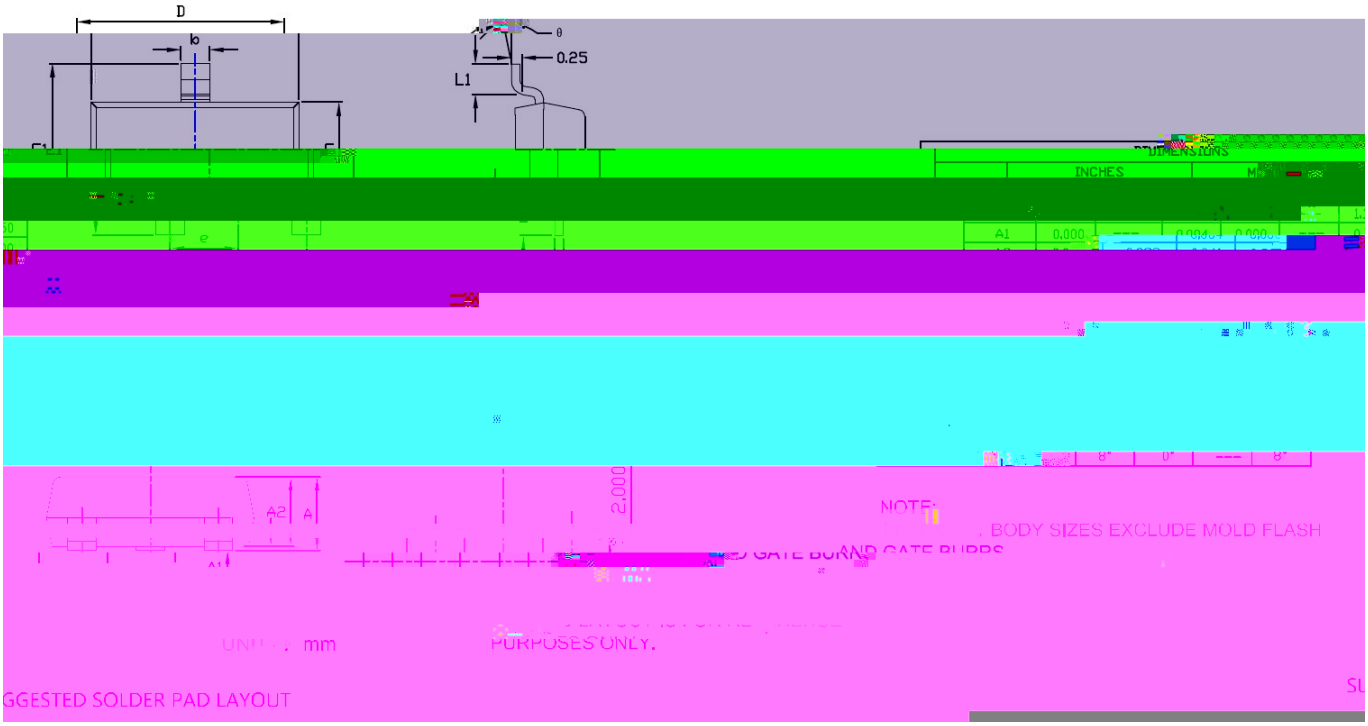
D
b
θ
0.25
L1
DIMENSIONS
INCHES
A1
0.000
A2
A
2.000
NOTE:
BODY SIZES EXCLUDE MOLD FLASH
AND GATE BURRS
mm
PURPOSES ONLY.
GGESTED SOLDER PAD LAYOUT